END MILLS STEPPED

- Straight Shank
- Stepped

E-mail: info@stntools.tw

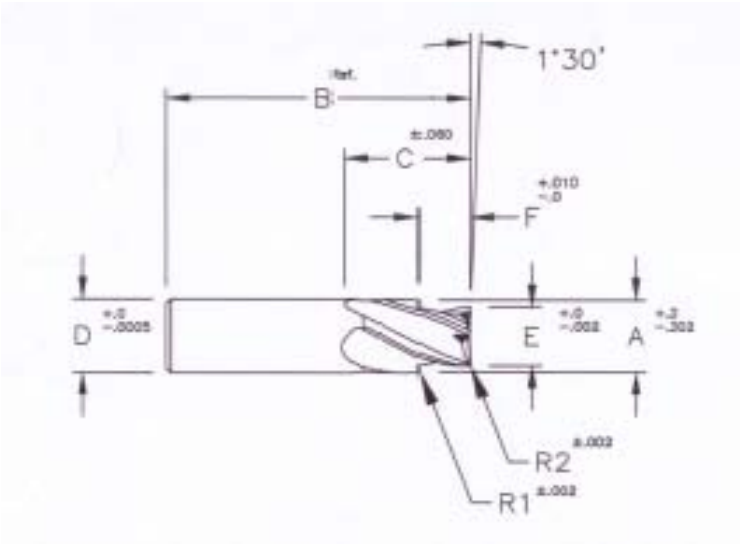

Material machined:
_____
_____
_____

Special Notes:
_____
_____
_____

Carbide Grade: _____

Centre cutting
yes □ No □

Coating
yes □ No □

Type _____

. CODE NUMBER

Article No	Cutting Dia	O.A.Length	Flute Lgth	Shank Dia.	Stepped Dia	Stepped dia len	Step angle	Helix Angle	Corner Radius	Corner Radius	# of Flutes
								0=straight			2, 4 , 6 or 8
	A	B	C	D	E	F			R1	R2	